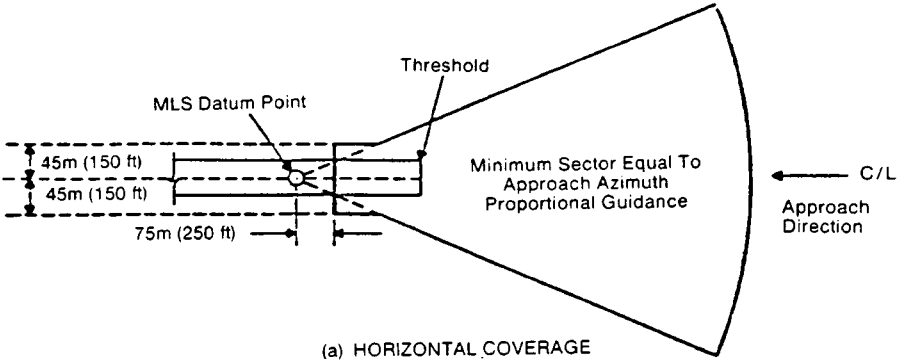

(a) HORIZONTAL COVERAGE

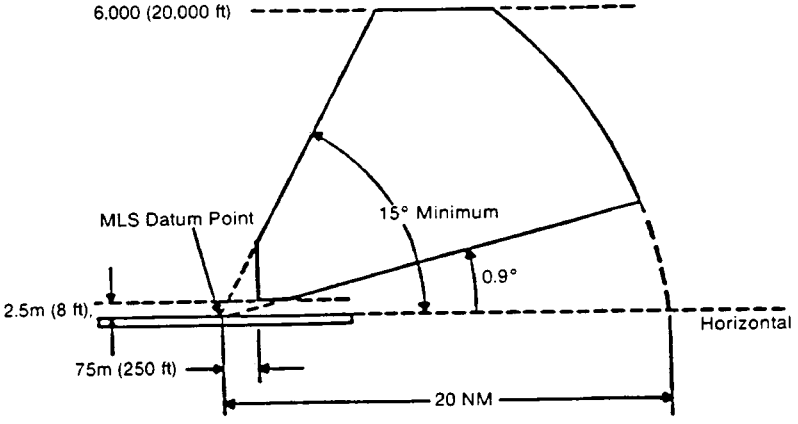

(b) VERTICAL COVERAGE

Figure 13. Approach Elevation Coverage